THIS DRAWING IS THE PROPERTY OF ANALOG DEVICES INC. IT IS NOT TO BE REPRODUCED OR COPIED, IN WHOLE OR IN PART, OR USED IN FURNISHING INFORMATION TO OTHERS, OR FOR ANY OTHER PURPOSE DETRIMENTAL TO THE INTERESTS OF ANALOG DEVICES.
THE EQUIPMENT SHOWN HEREON MAY BE PROTECTED BY PATENTS OWNED OR CONTROLLED BY ANALOG DEVICES.

RELAY CONTROL CHART

CONTROL	CODE	DEVICE	FUNCTION	CONNECTOR

JUMPER TABLE

JP#	ON	OFF
1		
2		
3		
4		
5		

* SEE ASSEMBLY INSTRUCTIONS

REVISIONS

REV	DESCRIPTION	DATE	APPROVED
A	INITIAL RELEASE	24NOV23	D. BOISER
B	ECR-119026	07FEB24	D. BOISER
C	ECR-120029	26MAR24	D. BOISER
D	ECR-120066	27MAR24	D. BOISER

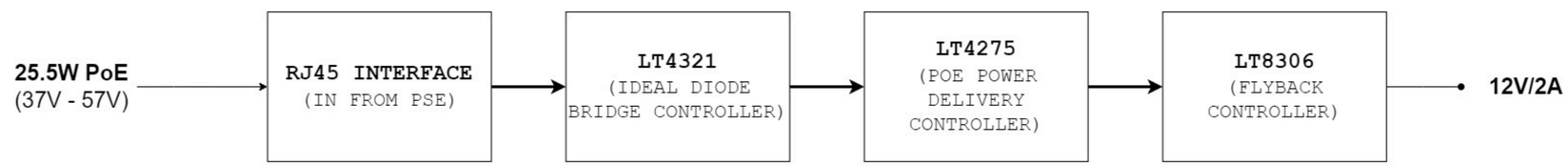

Simplified System Block Diagram

P.O SPEC.	BK/BD SPEC.	SOCKET OEM	OEM PART#	HANDLER

TEMPLATE ENGINEER BILLY PHILLIPS	DATE 14APR21	SCHEMATIC
HARDWARE SERVICES BOB MACDONALD	14APR21	
HARDWARE SYSTEMS DAVE WILLIAMS	14APR21	HW TYPE : Customer Evaluation Product(s): LT4275B and LT8306 : 25.5W POE Class 2 PACKAGE : LeadCount-lead BodySize PackageType-family : Pitch-pitch StyleVendor Style
TEST ENGINEER N/A	N/A	
COMPONENT ENGINEER ADGT LIBRARY	20NOV23	
TEST PROCESS N/A	N/A	<User Define> <User Define> <User Define>
HARDWARE RELEASE C. LAPPAY	07FEB24	
DESIGNER C. LAPPAY	07FEB24	MASTER PROJECT TEMPLATE TBD / TESTER TEMPLATE 067706_a
PTD ENGINEER D. BOISER	07FEB24	UNLESS OTHERWISE SPECIFIED DIMENSIONS ARE IN INCHES TOLERANCES DECIMALS X.XX +-0.010 X.XXX +-0.005 / FRACTIONS +-1/32 / ANGLES +-2
CHECKER N/A	N/A	

DRAWING NO. 02_081007 REV. C

SIZE D | SCALE 1:1 | CODE ID NO. CodeID | SHEET 1 OF 4

REVISIONS			
REV	DESCRIPTION	DATE	APPROVED

POE TO PHY INTERFACE

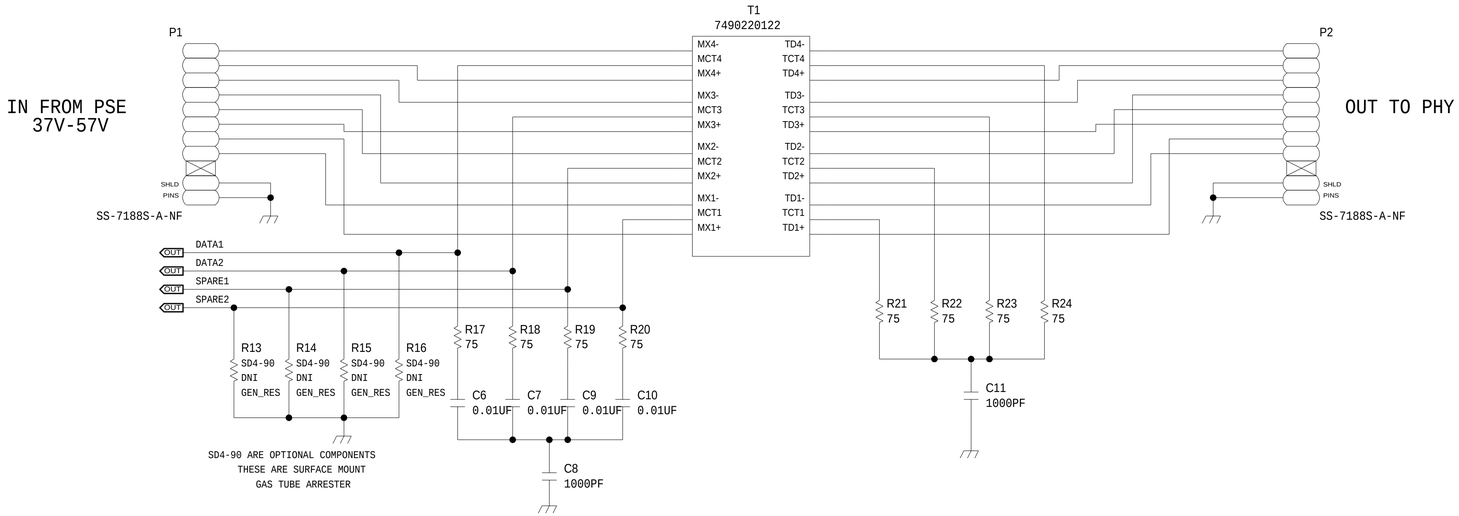

LT4321 POE IDEAL DIODE BRIDGE CONTROLLER

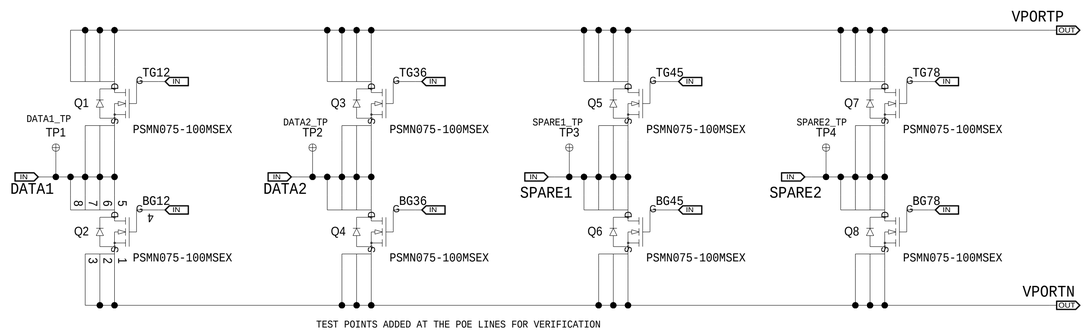

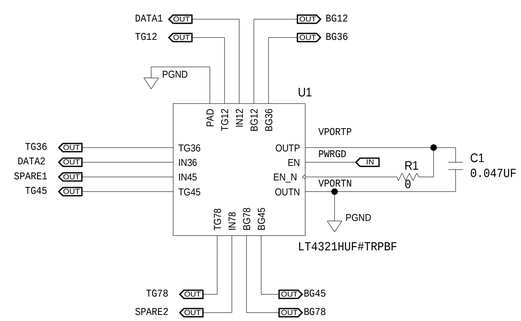

DISCLAIMER:

THE SCHEMATIC PROVIDED HEREIN IS INTENDED SOLELY FOR REFERENCE PURPOSES. ANALOG DEVICES (ADI) ASSUMES NO RESPONSIBILITY FOR THE ACCURACY OR COMPLETENESS OF THE INFORMATION CONTAINED IN THIS SCHEMATIC.

USERS OF THIS SCHEMATIC ARE SOLELY RESPONSIBLE FOR ITS IMPLEMENTATION AND ANY ASSOCIATED CONSEQUENCES.

THIS DRAWING IS THE PROPERTY OF ANALOG DEVICES INC.
IT IS NOT TO BE REPRODUCED OR COPIED, IN WHOLE OR
IN PART, OR USED IN FURNISHING INFORMATION TO OTHERS,
OR FOR ANY OTHER PURPOSE DETRIMENTAL TO THE INTERESTS
OF ANALOG DEVICES.
THE EQUIPMENT SHOWN HEREON MAY BE PROTECTED BY PATENTS
OWNED OR CONTROLLED BY OWNED ANALOG DEVICES.

ANALOG DEVICES

SCHEMATIC

HW TYPE : Customer Evaluation
Product(s): LT4275B and LT8306
: 25.5W POE Class 2

DESIGN VIEW	DRAWING NO.	REV
<DESIGN_VIEW>	02_081007	C

PTD ENGINEER	SIZE	SCALE	SHEET 2 OF 4
D. BOISER	D	1:1	

REVISIONS			
REV	DESCRIPTION	DATE	APPROVED

LT4275BIDD POE POWER DELIVERY

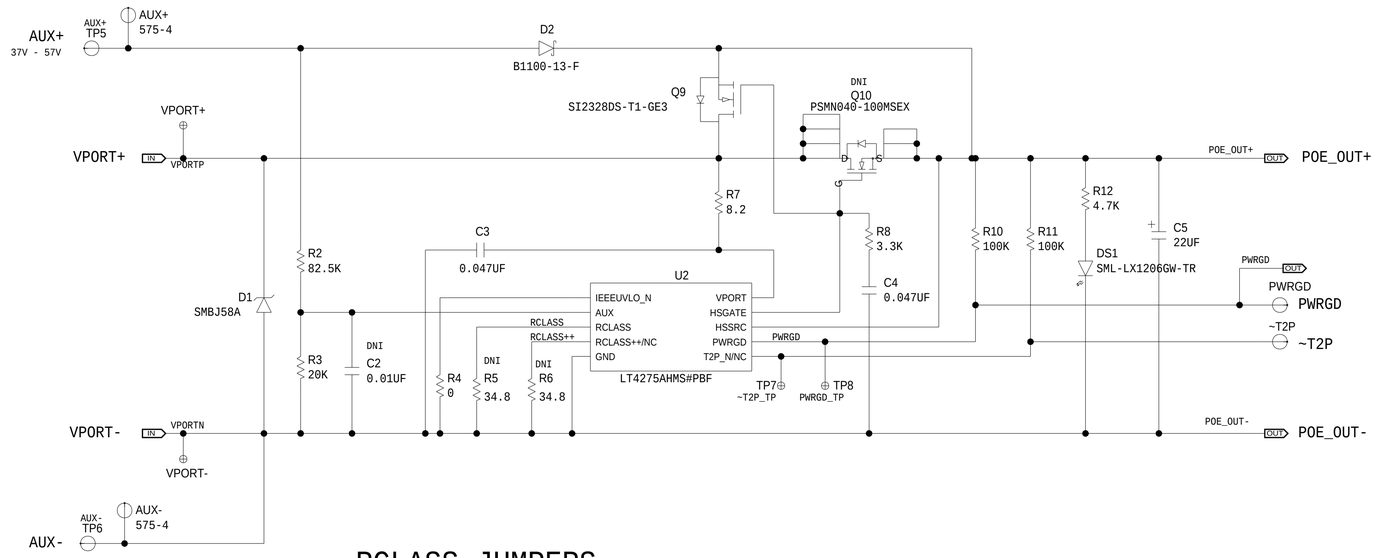

RCLASS JUMPERS

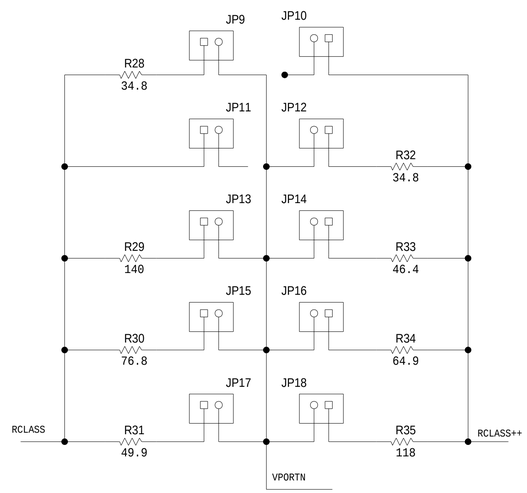

JUMPER SELECTIONS

POE CLASS	POWER	CLASS	CLASS++
4	25.5W	JP9	JP10
4 ***	38.7W	JP11	JP12
4 ***	52.7W	JP13	JP14
4 ***	70W	JP15	JP16
4 ***	90W	JP17	JP18

*** AN LTPOE++ PD WILL BE CLASSIFIED AS CLASS 4 BY AN IEEE 802.3-AT COMPLIANT PSE

DISCLAIMER:

THE SCHEMATIC PROVIDED HEREIN IS INTENDED SOLELY FOR REFERENCE PURPOSES. ANALOG DEVICES (ADI) ASSUMES NO RESPONSIBILITY FOR THE ACCURACY OR COMPLETENESS OF THE INFORMATION CONTAINED IN THIS SCHEMATIC.

USERS OF THIS SCHEMATIC ARE SOLELY RESPONSIBLE FOR ITS IMPLEMENTATION AND ANY ASSOCIATED CONSEQUENCES.

ANALOG DEVICES

THIS DRAWING IS THE PROPERTY OF ANALOG DEVICES INC.
IT IS NOT TO BE REPRODUCED OR COPIED, IN WHOLE OR IN PART, OR USED IN FURNISHING INFORMATION TO OTHERS, OR FOR ANY OTHER PURPOSE DETRIMENTAL TO THE INTERESTS OF ANALOG DEVICES.
THE EQUIPMENT SHOWN HEREON MAY BE PROTECTED BY PATENTS OWNED OR CONTROLLED BY OWNED ANALOG DEVICES.

SCHEMATIC

HW TYPE : Customer Evaluation
Product(s): LT4275B and LT8306
: 25.5W POE Class 2

DESIGN VIEW	DRAWING NO.	REV
<DESIGN_VIEW>	02_081007	C

PTD ENGINEER	SIZE	SCALE	SHEET 3 OF 4
D. BOISER	D	1:1	

REVISIONS			
REV	DESCRIPTION	DATE	APPROVED

LT8306 SYNCHRONOUS FLYBACK DC/DC CONTROLLER: OUTPUT 12V, 2A

SPECIFICATIONS:

INPUT : 37V - 57V

OUTPUT: 12V, 2A

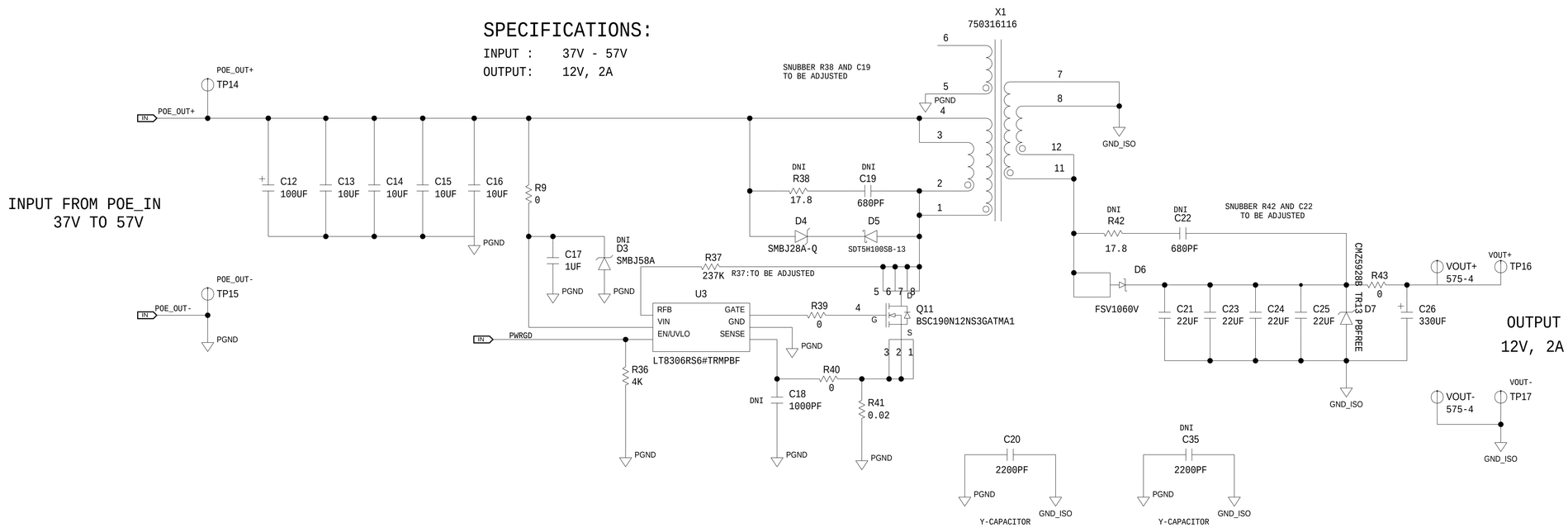

DISCLAIMER:

THE SCHEMATIC PROVIDED HEREIN IS INTENDED SOLELY FOR REFERENCE PURPOSES. ANALOG DEVICES (ADI) ASSUMES NO RESPONSIBILITY FOR THE ACCURACY OR COMPLETENESS OF THE INFORMATION CONTAINED IN THIS SCHEMATIC.

USERS OF THIS SCHEMATIC ARE SOLELY RESPONSIBLE FOR ITS IMPLEMENTATION AND ANY ASSOCIATED CONSEQUENCES.

THIS DRAWING IS THE PROPERTY OF ANALOG DEVICES INC.
IT IS NOT TO BE REPRODUCED OR COPIED, IN WHOLE OR
IN PART, OR USED IN FURNISHING INFORMATION TO OTHERS,
OR FOR ANY OTHER PURPOSE DETRIMENTAL TO THE INTERESTS
OF ANALOG DEVICES.
THE EQUIPMENT SHOWN HEREON MAY BE PROTECTED BY PATENTS
OWNED OR CONTROLLED BY OWNED ANALOG DEVICES.

ANALOG DEVICES

SCHEMATIC

HW TYPE : Customer Evaluation
Product(s): LT4275B and LT8306
: 25.5W POE Class 2

DESIGN VIEW	DRAWING NO.	REV
<DESIGN_VIEW>	02_081007	C

PTD ENGINEER	SIZE	SCALE	SHEET 4 OF 4
D. BOISER	D	1:1	